TOP VIEW

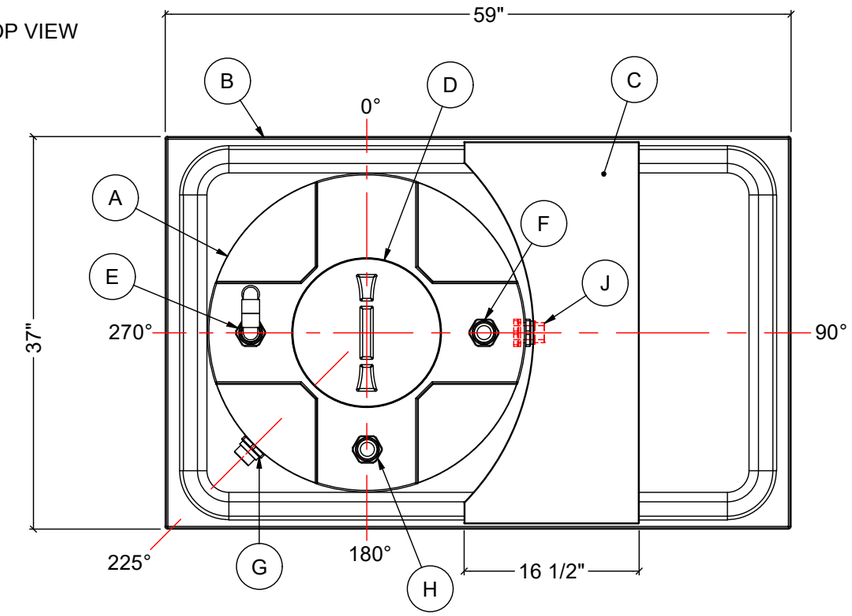

FITTINGS TO BE INSTALLED IN
APPROX. LOCATION AS SHOWN ON
TOP VIEW

NOTES:
1. ALL TANK DIMENSIONS ARE SUBJECT TO +/-3% TOLERANCE.
2. ALL EXTERNAL PIPING AND ACCESSORIES MUST BE FULLY SUPPORTED TO AVOID STRESSING THE TANK.
3. CONTACT YOUR CHEMICAL SUPPLIER TO ENSURE ALL MATERIALS ARE COMPATIBLE WITH THE PRODUCT YOU INTEND TO STORE.

MATERIAL OPTIONS

TANK: HDPE , XLPE
TANK WALL THICKNESS: 1.5SG, 1.9SG, 2.2SG
FIITTINGS: PVC , SS-316
GASKETS: EPDM , VITON

MATERIALS LIST

ITEMS	DESCRIPTION	NOTES
A	CT-100-CH CLOSED TOP TANK	
B	IRD-165 SECONDARY CONTAINMENT BASIN	
C	HDPE MOULDED PUMP SHELF	
D	12" THREADED LID	NON-VENTED
E	1" FNPT TANK ADAPTER WITH U-VENT ASSEMBLY	
F	1" FNPT TANK ADAPTER	
G	1" FNPT TANK ADAPTER	
H	1" FNPT TANK ADAPTER	
J	1" FNPT TANK ADAPTER	

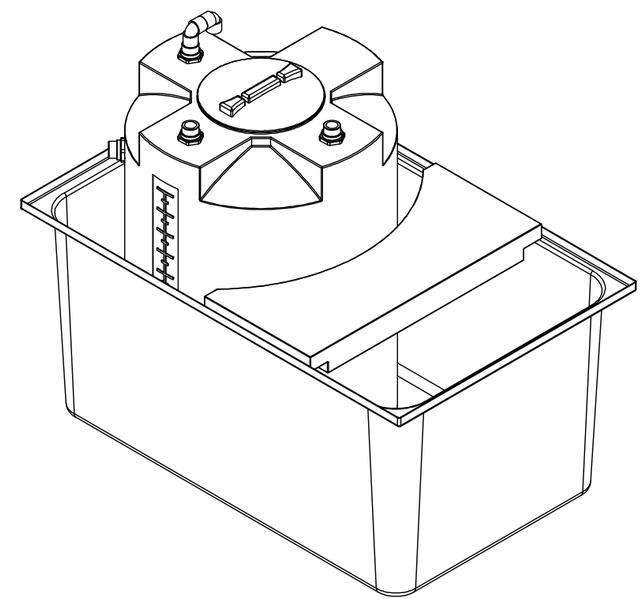

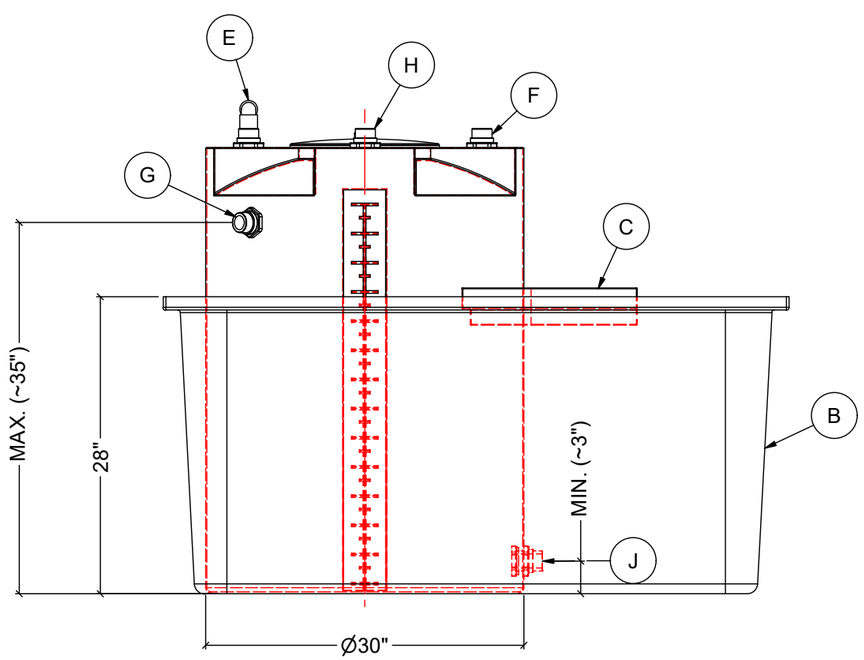

FRONT VIEW

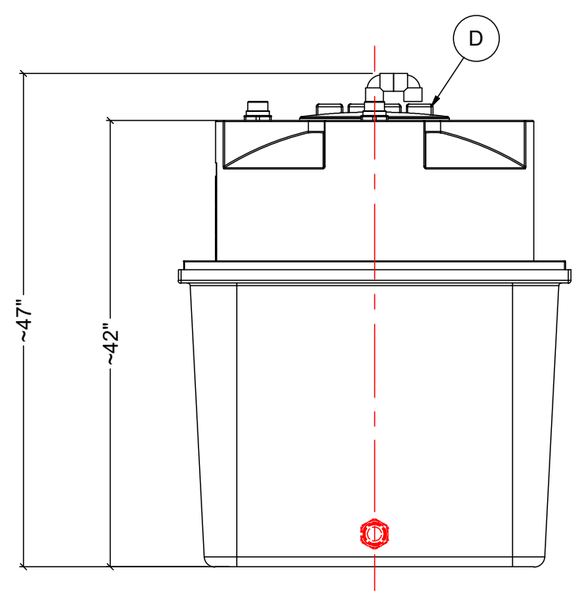

SIDE VIEW

REV	DATE	DESCRIPTION	BY	APPD	REVD

REVISIONS

CUSTOMER

TITLE
100 I.G. FEED STATION ASSEMBLY

ACO JOB NO:
PURCHASE ORDER NO:
PURCHASER'S EQUIP. NO:

THIS DRAWING IS THE PROPERTY OF ACO CONTAINER SYSTEMS LTD. AND SHALL NOT BE COPIED OR TRANSFERRED WITHOUT THE WRITTEN CONSENT OF ACO CONTAINER SYSTEMS LTD.

ENGINEERS SEAL

ACO CONTAINER SYSTEMS LTD.
PICKERING - ONTARIO - CANADA

ACO CONTAINER SYSTEMS LTD.
794 MCKAY RD.
PICKERING, ONTARIO, CANADA
L1W 2Y4
TEL. 905-683-8222
FAX 905-683-2969

DESIGNED	
DRAWN	WM
CHECKED	
APPROVED	
SCALE	N.T.S.
DATE	NOV-12-2024

DWG No FS-100-2024
REV 0