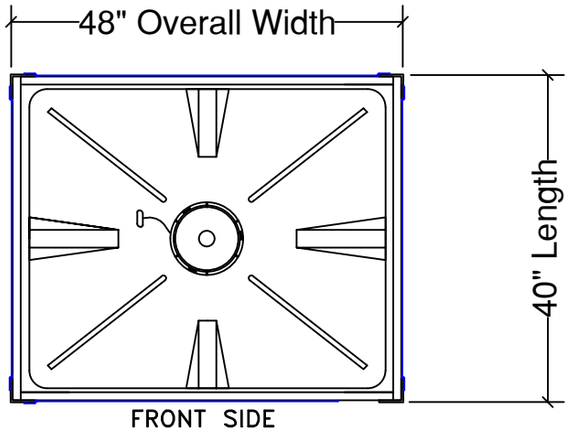

PLAN VIEW

NOTES:

1. UNIT IS MANUFACTURED FROM LLDPE RESIN WITH A CARBON STEEL OUTER FRAME

NOZZLE SCHEDULE

ITEM	SIZE	DESCRIPTION	NOTES
A	6"	ORANGE THREADED LID	EPDM GASKET
B	6"	POLYPRO THREADED BALL VALVE	EPDM GASKET
C	-	OUTER STEEL FRAME	PAINTED BLUE

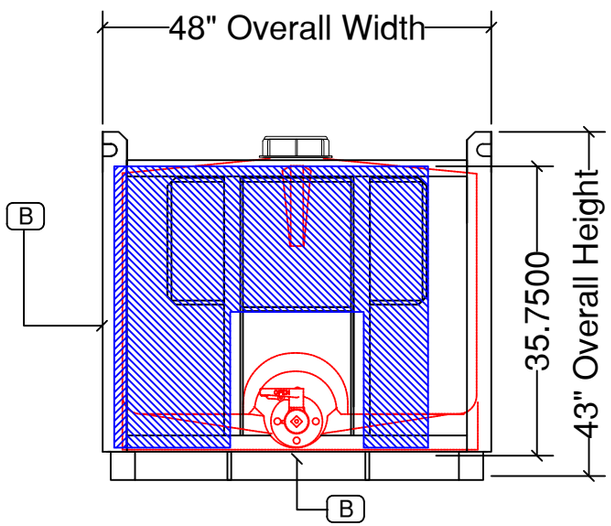

FRONT VIEW

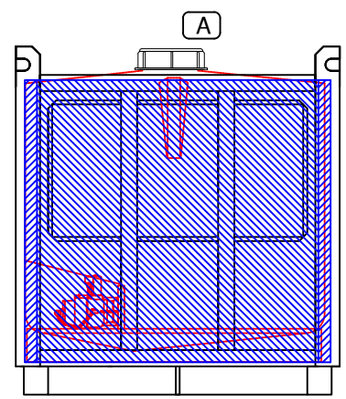

SIDE VIEW

REV	DATE	DESCRIPTION	BY	APPD	REVD

REVISIONS

CUSTOMER

TITLE
PTC-125-FE
FRAME AND BOTTLE

ACO JOB NO: -
PURCHASE ORDER NO: -
PURCHASER'S EQUIP. NO:

THIS DRAWING IS THE PROPERTY OF ROTOPLAST INC. AND SHALL NOT BE COPIED OR TRANSFERRED WITHOUT THE WRITTEN CONSENT OF ROTOPLAST INC.

ENGINEERS SEAL

ACO CONTAINER SYSTEMS
DIVISION OF ROTOPLAST INC.

PICKERING - ONTARIO - CANADA

ACO CONTAINER SYSTEMS
DIVISION OF ROTOPLAST INC.
794 MCKAY RD.
PICKERING, ONTARIO, CANADA
TEL. 905-683-8222
FAX 905-683-2969

DESIGNED	S.A.
DRAWN	A.M.
CHECKED	
APPROVED	
SCALE	N.T.S.
DATE	11-03-02

DWG No PTC-125-FE

REV 0