TOP VIEW

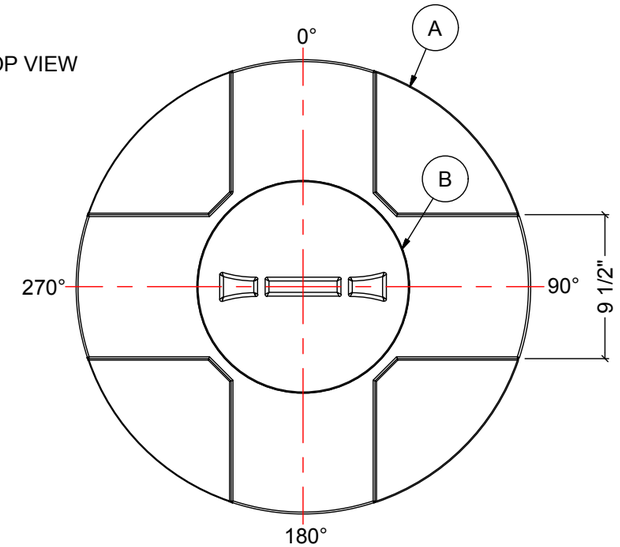

NOTES:

1. TANK IS MANUFACTURED TO ASTM-D-1998 STANDARD.
2. ALL DIMENSIONS ARE APPROXIMATE.

MATERIALS LIST		
ITEMS	DESCRIPTION	NOTES
A	CT-100-CH TANK	
B	12" THREADED MCPHEE LID	

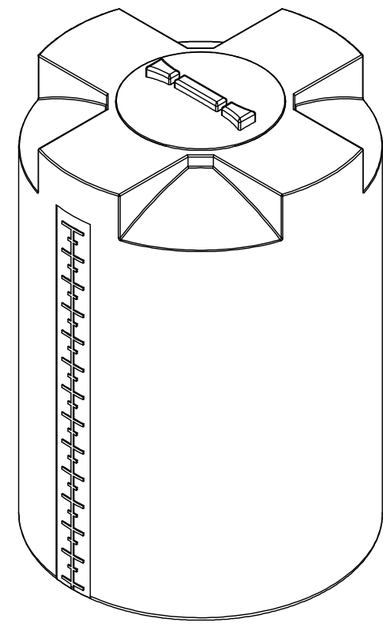

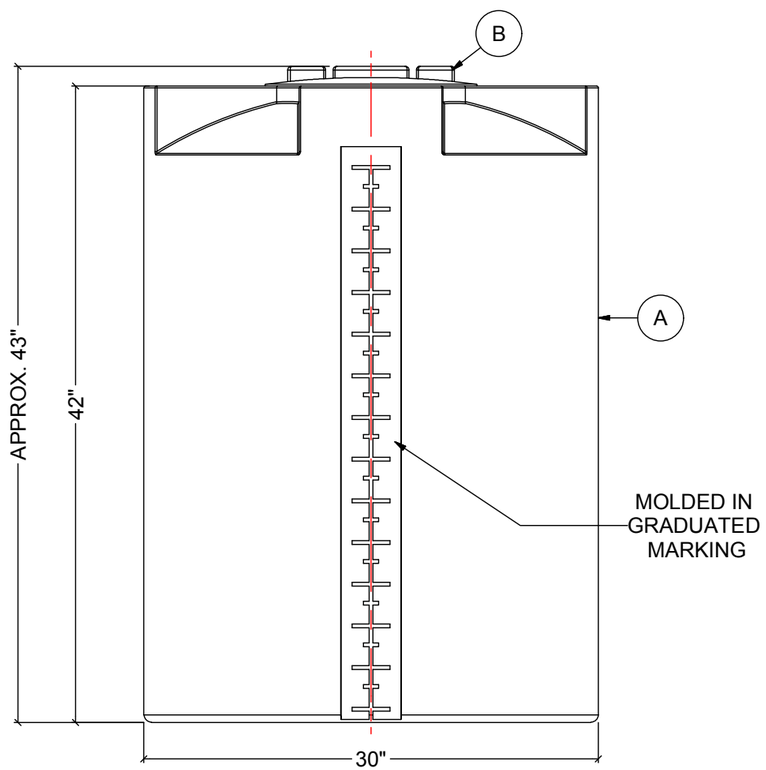

FRONT VIEW

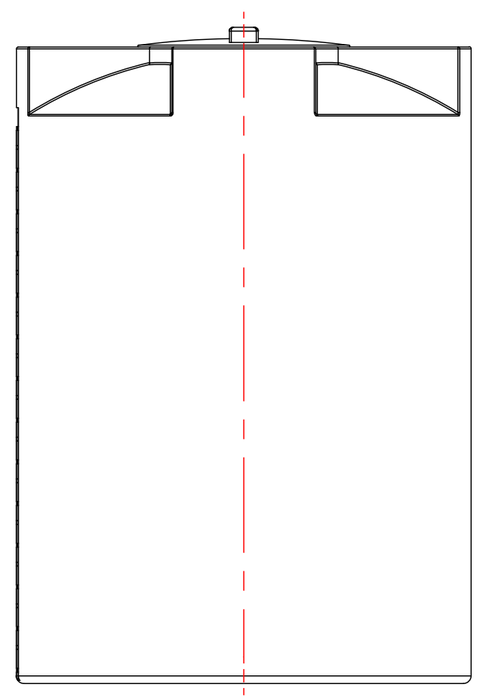

SIDE VIEW

REV	DATE	DESCRIPTION	BY	APPD	REVD

REVISIONS

CUSTOMER

TITLE
100 IG CLOSED TOP TANK

ACO JOB NO:
PURCHASE ORDER NO:
PURCHASER'S EQUIP. NO:

THIS DRAWING IS THE PROPERTY OF ROTOPLAST INC.
AND SHALL NOT BE COPIED OR TRANSFERRED WITHOUT THE
WRITTEN CONSENT OF ROTOPLAST INC.

ENGINEERS SEAL

ACO CONTAINER SYSTEMS
DIVISION OF ROTOPLAST INC.
PICKERING - ONTARIO - CANADA

ACO CONTAINER SYSTEMS
DIVISION OF ROTOPLAST INC.
794 MCKAY RD.
PICKERING, ONTARIO, CANADA
TEL. 905-683-8222
FAX 905-683-2969

DESIGNED	
DRAWN	WM
CHECKED	
APPROVED	
SCALE	N.T.S.
DATE	02-03-16

DWG No CT-100-CH

REV 0