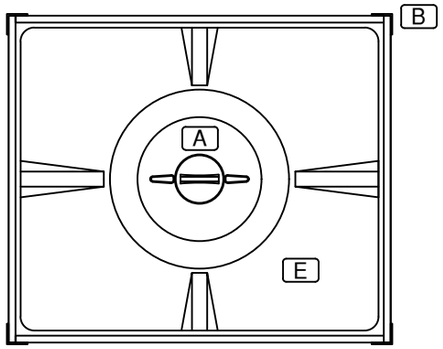

PLAN VIEW

NOTES:

1. UNIT IS MANUFACTURED FROM LLDPE RESIN WITH A CARBON STEEL OUTER FRAME
2. RESIN IS F.D.A. APPROVED (ESCORENE LL-8360 RESIN)
3. MAXIMUM TEMPERATURE RATING IS 140° (F)
4. NOT FOR USE WITH LIQUID PRODUCTS

NOZZLE SCHEDULE

ITEM	SIZE	DESCRIPTION	RATING
A	15"	THREADED LID WITH RIM & BOLTS	ACCESS
B	--	STEEL LIFTING LUG (CUT OUT)	(4) PLACES
C	--	CARBON STEEL SUPPORT FRAME	SUPPORT
		C/W (4) WAY FORK LIFT ENTRY	
		PAINTED WITH BLUE ENAMEL	
D	--	CARBON STEEL SIDE PANELS	SUPPORT
E	--	37 CUBIC FOOT CAPACITY LLDPE	STORAGE
		STORAGE TANK	
F	8"	HDPE CUSTOM SLIDING GATE	OUTLET
		VALVE WITH HANDLE.	

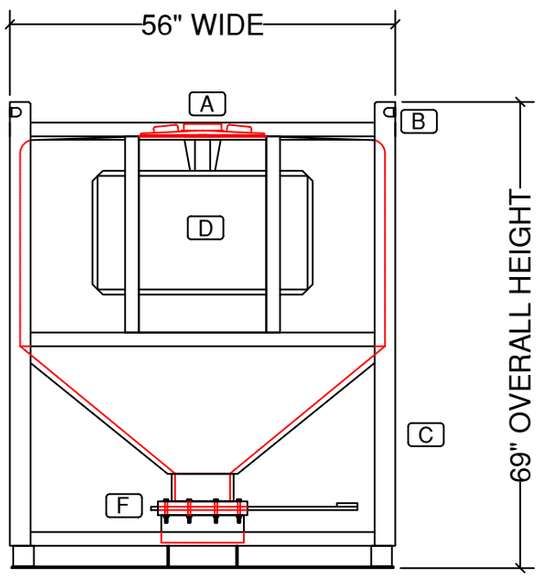

FRONT VIEW

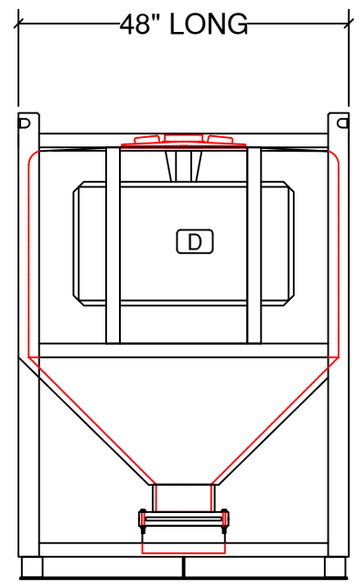

SIDE VIEW

REV	DATE	DESCRIPTION	BY	APPD	REVD

REVISIONS

CUSTOMER

TITLE

ACO JOB NO: -

PURCHASE ORDER NO:

PURCHASER'S EQUIP. NO:

THIS DRAWING IS THE PROPERTY OF ROTOPLAST INC. AND SHALL NOT BE COPIED OR TRANSFERRED WITHOUT THE WRITTEN CONSENT OF ROTOPLAST INC.

ENGINEERS SEAL

ACO CONTAINER SYSTEMS
DIVISION OF ROTOPLAST INC.

PICKERING - ONTARIO - CANADA

ACO CONTAINER SYSTEMS
DIVISION OF ROTOPLAST INC.
794 MCKAY RD.
PICKERING, ONTARIO, CANADA
TEL. 905-683-8222
FAX 905-683-2969

DESIGNED	
DRAWN	
CHECKED	
APPROVED	
SCALE	N.T.S.
DATE	11-04-16

DWG No PH-1000

REV 0