NOZZLE SCHEDULE

ITEM	SIZE	DESCRIPTION	NOTES

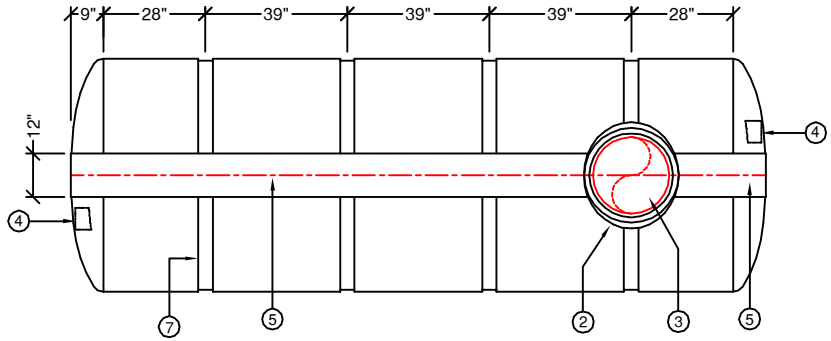

PLAN VIEW

NOTES:

1. DOME FLAT 12" x 64" (2 PLACES)
2. 26" DIA. FLAT SPOT FOR LID
3. 21" THREADED LID
4. END FLAT SPOT 6" x 12" (2 PLACES)
5. TOP FLAT SPOT 12" x 107"
6. TOP FLAT SPOT 12" x 22"
7. STIFFENER GROOVES 4" x 1/2" (4 PLACES)

STEEL CRADLE NOT SHOWN

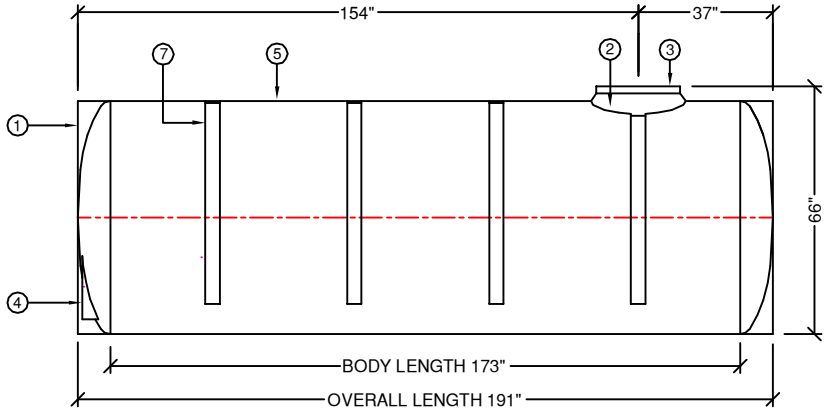

FRONT VIEW

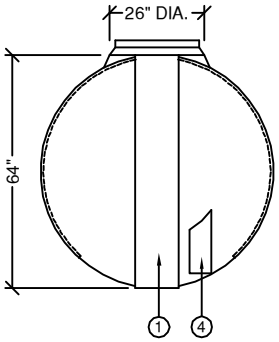

SIDE VIEW

REV	DATE	DESCRIPTION	BY	APPD	REVD

REVISIONS

CUSTOMER

TITLE

ACO JOB NO:

PURCHASE ORDER NO: –

PURCHASER'S EQUIP. NO: –

THIS DRAWING IS THE PROPERTY OF ACO CONTAINER SYSTEMS LTD. AND SHALL NOT BE COPIED OR TRANSFERRED WITHOUT THE WRITTEN CONSENT OF ACO CONTAINER SYSTEMS LTD.

ENGINEERS SEAL

ACO CONTAINER SYSTEMS LTD.

PICKERING - ONTARIO - CANADA

ACO CONTAINER SYSTEMS LTD.
794 MCKAY RD.
PICKERING, ONTARIO, CANADA
L1W 2Y4
TEL. 905-683-8222
FAX 905-683-2969

DESIGNED	S.A.
DRAWN	J.M.
CHECKED	
APPROVED	
SCALE	N.T.S.
DATE	08-29-06

DWG No IHT-2085

REV 0