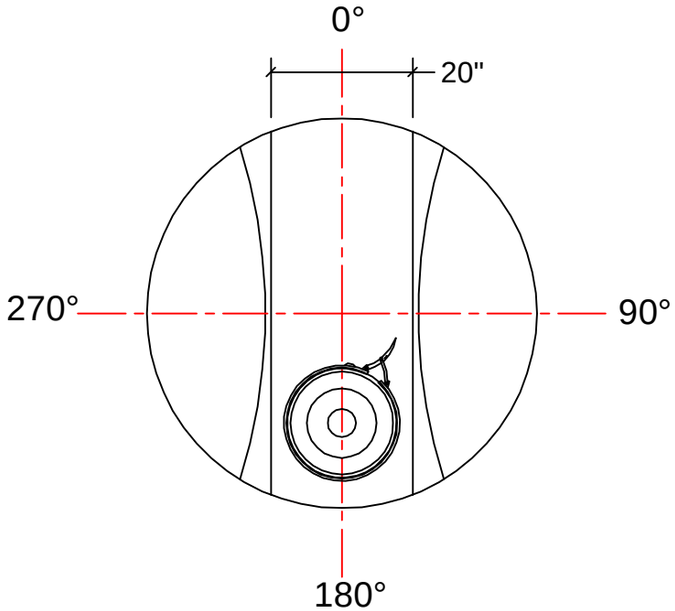


PLAN VIEW

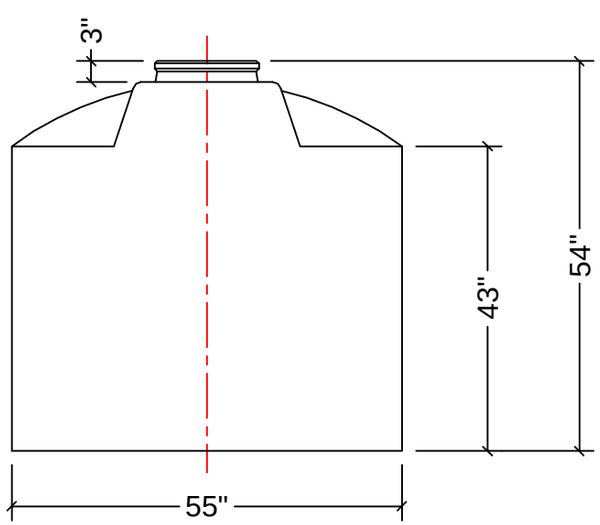


FRONT VIEW

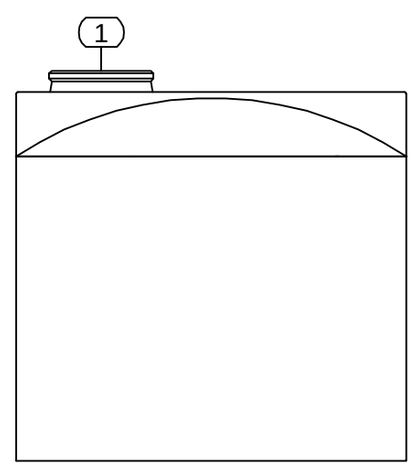


SIDE VIEW

NOZZLE SCHEDULE

| ITEM | SIZE | DESCRIPTION | NOTES |
|---|---|---|---|
| | | | |
| | | | |
| | | | |
| | | | |
| | | | |
| | | | |
| | | | |
| | | | |
| | | | |
| | | | |

NOTES:

1. 14" LID WITH STAINLESS STEEL LOCK RING.

| REV | DATE | DESCRIPTION | BY | APPD | REVD |
|---|---|---|---|---|---|
| | | | | | |
| | | | | | |
| | | | | | |

REVISIONS

CUSTOMER

TITLE

ACO JOB NO: –
PURCHASE ORDER NO: –
PURCHASER'S EQUIP. NO: –

THIS DRAWING IS THE PROPERTY OF ACO CONTAINER SYSTEMS LTD. AND SHALL NOT BE COPIED OR TRANSFERRED WITHOUT THE WRITTEN CONSENT OF ACO CONTAINER SYSTEMS LTD.

ENGINEERS SEAL

ACO CONTAINER SYSTEMS LTD.

PICKERING - ONTARIO - CANADA

ACO CONTAINER SYSTEMS LTD.
794 MCKAY RD.
PICKERING, ONTARIO, CANADA
L1W 2Y4
TEL. 905-683-8222
FAX 905-683-2969

| | |
|---|---|
| DESIGNED | S.A. |
| DRAWN | J.M. |
| CHECKED | |
| APPROVED | |
| SCALE | N.T.S. |
| DATE | 01-31-07 |

DWG No CT-400

REV 1