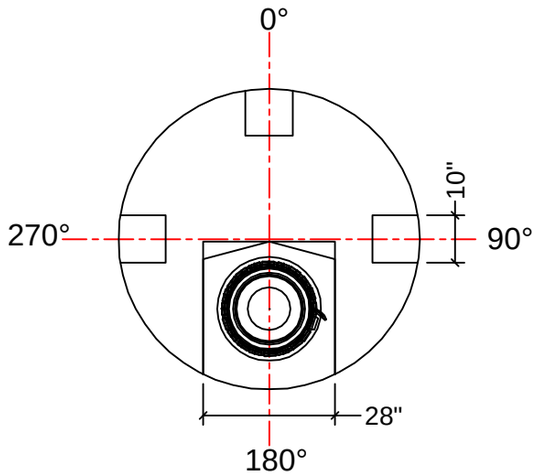


PLAN VIEW

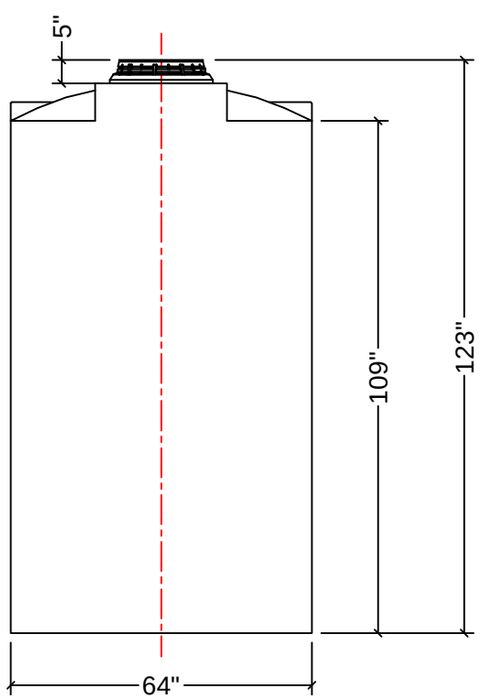


FRONT VIEW

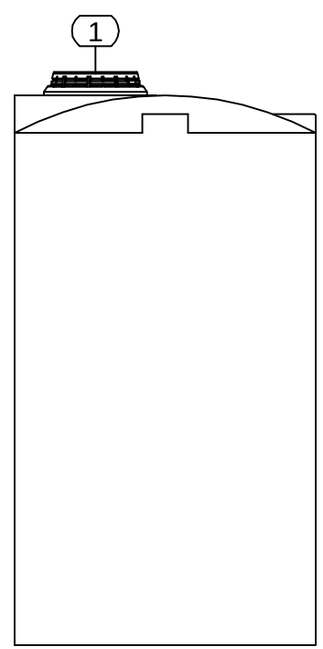


SIDE VIEW

## NOZZLE SCHEDULE

| ITEM | SIZE | DESCRIPTION | NOTES |
|---|---|---|---|
| | | | |
| | | | |
| | | | |
| | | | |
| | | | |
| | | | |
| | | | |
| | | | |
| | | | |
| | | | |

NOTES:

1. 16" LID WITH LOCKING STRAP. (21" THREADED LID AVAILABLE)

| REV | DATE | DESCRIPTION | BY | APPD | REVD |
|---|---|---|---|---|---|
| | | | | | |
| | | | | | |
| | | | | | |

REVISIONS

CUSTOMER

TITLE

ACO JOB NO: –
PURCHASE ORDER NO: –
PURCHASER'S EQUIP. NO: –

THIS DRAWING IS THE PROPERTY OF ACO CONTAINER SYSTEMS LTD. AND SHALL NOT BE COPIED OR TRANSFERRED WITHOUT THE WRITTEN CONSENT OF ACO CONTAINER SYSTEMS LTD.

ENGINEERS SEAL

# ACO CONTAINER SYSTEMS LTD.

PICKERING - ONTARIO - CANADA

ACO CONTAINER SYSTEMS LTD.
794 MCKAY RD.
PICKERING, ONTARIO, CANADA
L1W 2Y4
TEL. 905-683-8222
FAX 905-683-2969

| | |
|---|---|
| DESIGNED | S.A. |
| DRAWN | J.M. |
| CHECKED | |
| APPROVED | |
| SCALE | N.T.S. |
| DATE | 01-31-07 |

DWG No CT-1230

REV 1